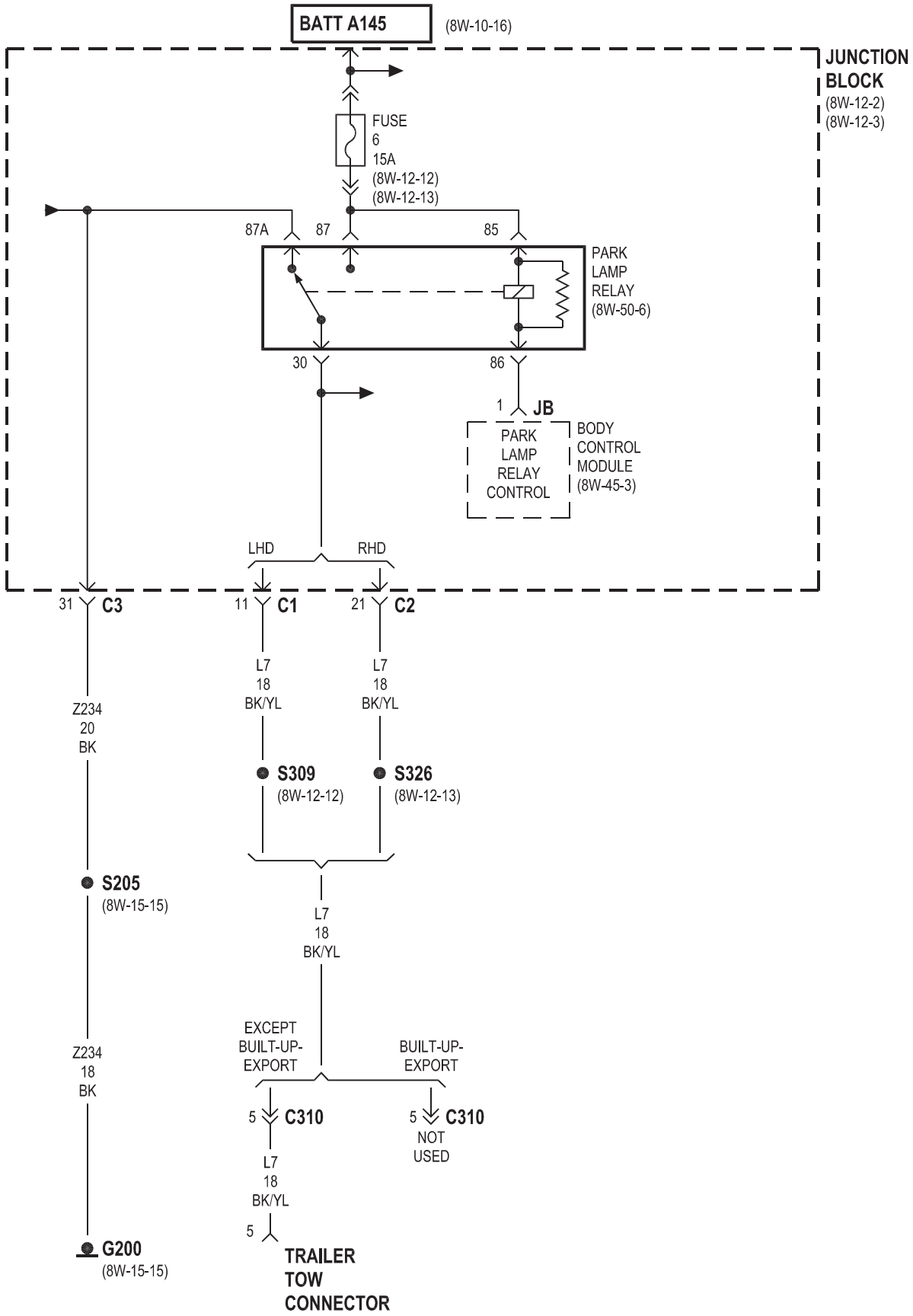
BATT A145
(8W-10-16)
JUNCTION BLOCK
(8W-12-2)
(8W-12-3)
FUSE
6
15A
(8W-12-12)
(8W-12-13)
87A
87
85
PARK LAMP RELAY
(8W-50-6)
30
86
1
JB
PARK LAMP RELAY CONTROL
BODY CONTROL MODULE
(8W-45-3)
LHD
RHD
31
C3
11
C1
21
C2
L7
18
BK/YL
L7
18
BK/YL
Z234
20
BK
S309
(8W-12-12)
S326
(8W-12-13)
S205
(8W-15-15)
L7
18
BK/YL
EXCEPT BUILT-UP-EXPORT
BUILT-UP-EXPORT
Z234
18
BK
5
C310
5
C310
NOT USED
L7
18
BK/YL
5
G200
(8W-15-15)
TRAILER TOW CONNECTOR

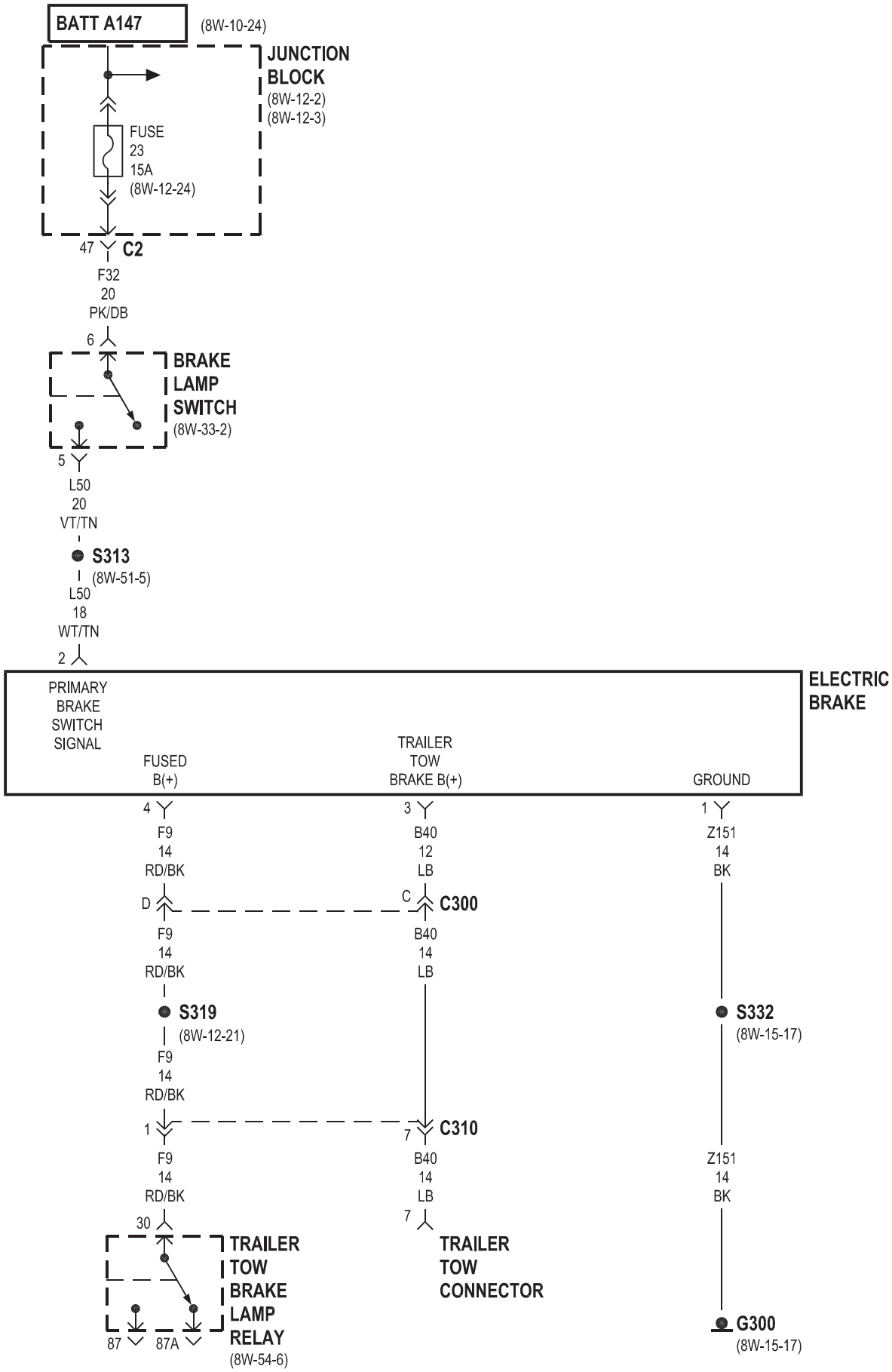
BATT A147
(8W-10-24)
JUNCTION BLOCK
(8W-12-2)
(8W-12-3)
FUSE
23
15A
(8W-12-24)
47
C2
F32
20
PK/DB
6
BRAKE LAMP SWITCH
(8W-33-2)
5
L50
20
VT/TN
S313
(8W-51-5)
L50
18
WT/TN
2
ELECTRIC BRAKE
PRIMARY BRAKE SWITCH SIGNAL
FUSED B(+)
TRAILER TOW BRAKE B(+)
GROUND
4
F9
14
RD/BK
3
B40
12
LB
1
Z151
14
BK
D
C
C300
F9
14
RD/BK
B40
14
LB
S319
(8W-12-21)
S332
(8W-15-17)
F9
14
RD/BK
1
7
C310
F9
14
RD/BK
B40
14
LB
Z151
14
BK
30
7
TRAILER TOW BRAKE LAMP RELAY
(8W-54-6)
87
87A
TRAILER TOW CONNECTOR
G300
(8W-15-17)

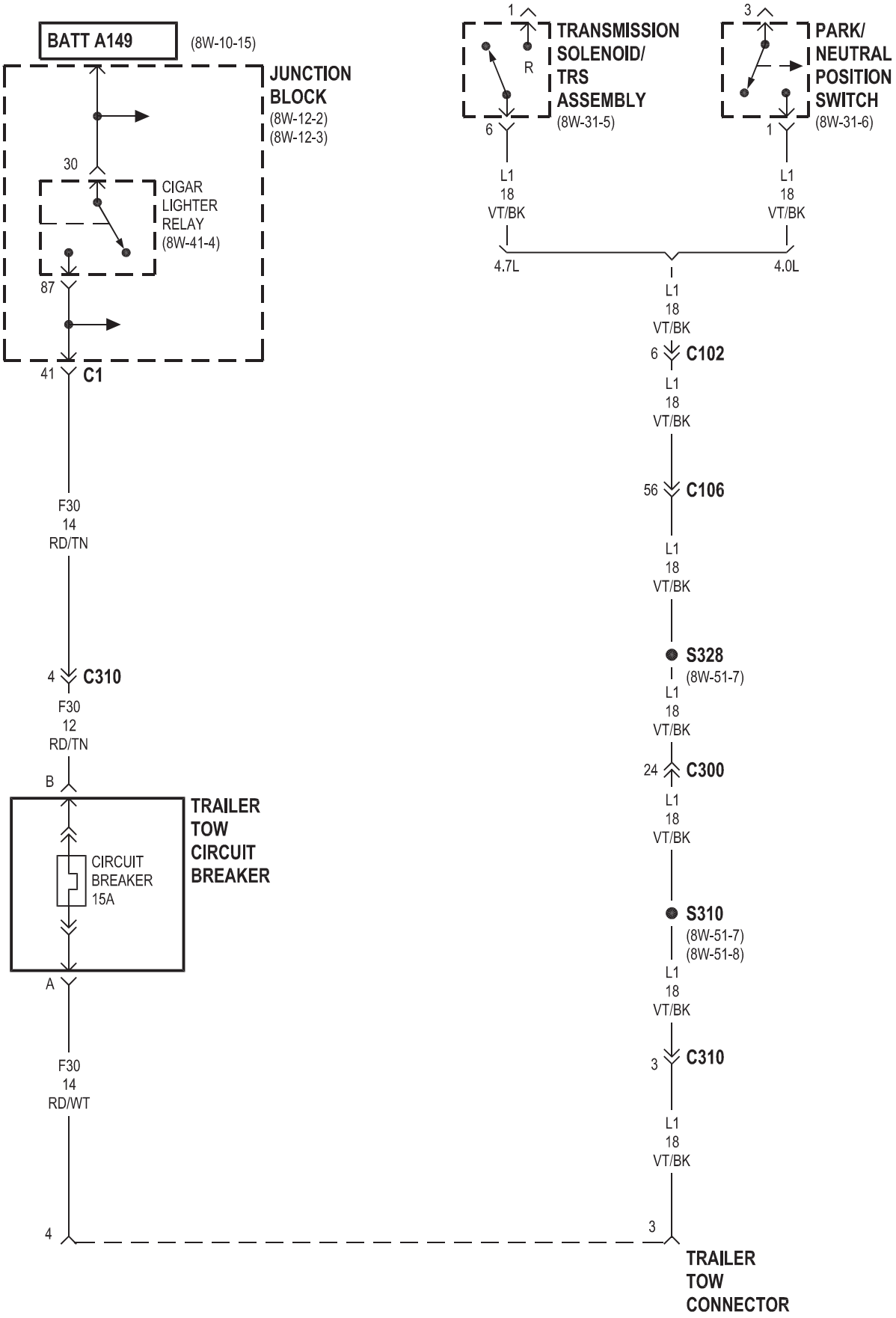
BATT A149
(8W-10-15)
JUNCTION BLOCK
(8W-12-2)
(8W-12-3)
30
CIGAR LIGHTER RELAY
(8W-41-4)
87
41
C1
F30
14
RD/TN
4
C310
F30
12
RD/TN
B
TRAILER TOW CIRCUIT BREAKER
CIRCUIT BREAKER 15A
A
F30
14
RD/WT
4
1
R
6
TRANSMISSION SOLENOID/ TRS ASSEMBLY
(8W-31-5)
3
1
PARK/ NEUTRAL POSITION SWITCH
(8W-31-6)
L1
18
VT/BK
4.7L
4.0L
6
C102
56
C106
S328
(8W-51-7)
24
C300
S310
(8W-51-7)
(8W-51-8)
3
C310
3
TRAILER TOW CONNECTOR

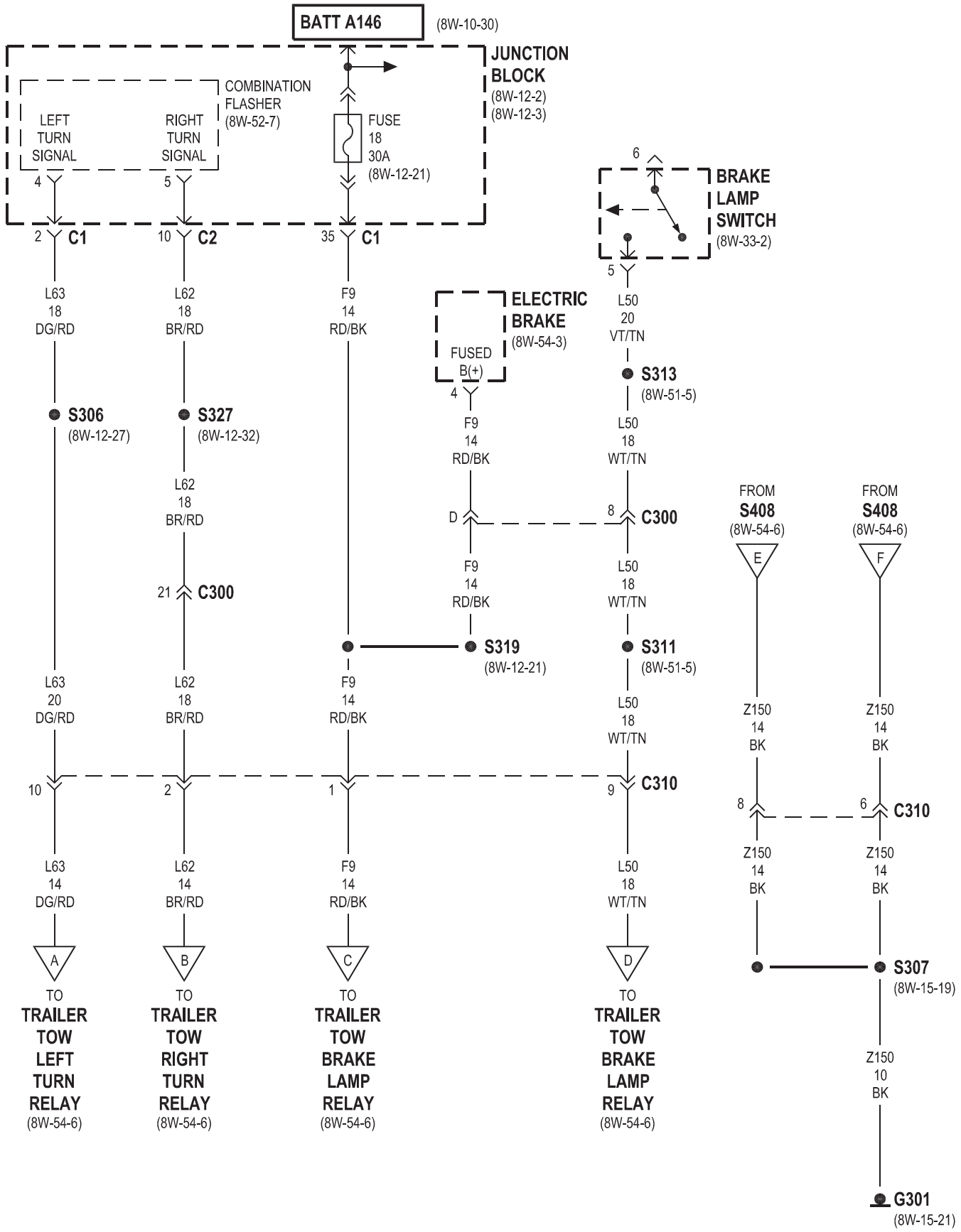
BATT A146
(8W-10-30)
JUNCTION BLOCK
(8W-12-2)
(8W-12-3)
COMBINATION FLASHER
(8W-52-7)
LEFT TURN SIGNAL
RIGHT TURN SIGNAL
FUSE 18 30A
(8W-12-21)
4
5
2 C1
10 C2
35 C1
6
BRAKE LAMP SWITCH
(8W-33-2)
5
L63 18 DG/RD
L62 18 BR/RD
F9 14 RD/BK
ELECTRIC BRAKE
(8W-54-3)
FUSED B(+)
L50 20 VT/TN
S313
(8W-51-5)
S306
(8W-12-27)
S327
(8W-12-32)
4
F9 14 RD/BK
L50 18 WT/TN
L62 18 BR/RD
D
8 C300
FROM S408
(8W-54-6)
E
FROM S408
(8W-54-6)
F
21 C300
F9 14 RD/BK
L50 18 WT/TN
S319
(8W-12-21)
S311
(8W-51-5)
L63 20 DG/RD
L62 18 BR/RD
F9 14 RD/BK
L50 18 WT/TN
Z150 14 BK
Z150 14 BK
10
2
1
9 C310
8
6 C310
L63 14 DG/RD
L62 14 BR/RD
F9 14 RD/BK
L50 18 WT/TN
Z150 14 BK
Z150 14 BK
A
B
C
D
S307
(8W-15-19)
TO TRAILER TOW LEFT TURN RELAY
(8W-54-6)
TO TRAILER TOW RIGHT TURN RELAY
(8W-54-6)
TO TRAILER TOW BRAKE LAMP RELAY
(8W-54-6)
TO TRAILER TOW BRAKE LAMP RELAY
(8W-54-6)
Z150 10 BK
G301
(8W-15-21)

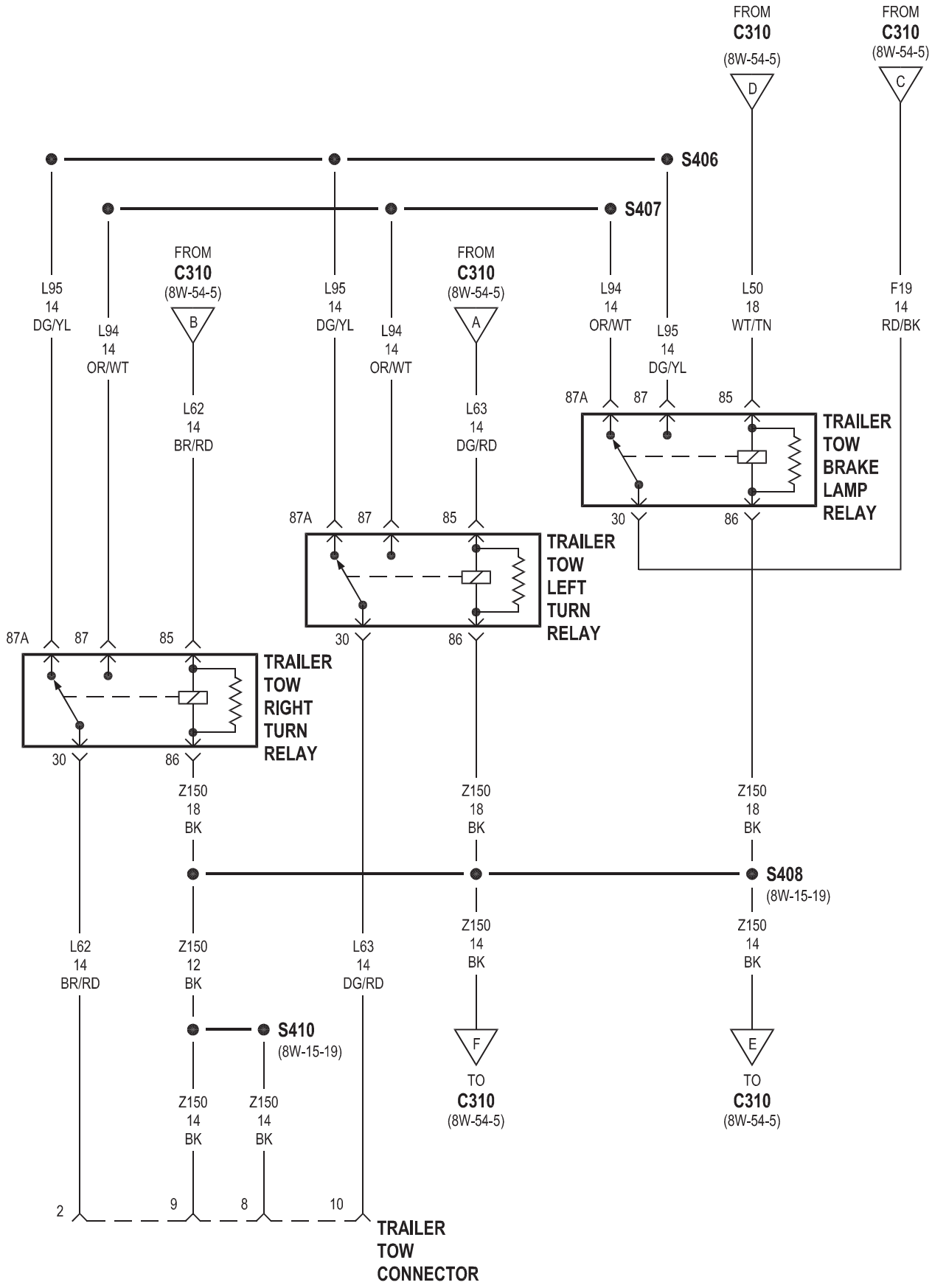
FROM
C310
(8W-54-5)
D
FROM
C310
(8W-54-5)
C
S406
S407
FROM
C310
(8W-54-5)
B
FROM
C310
(8W-54-5)
A
L95
14
DG/YL
L94
14
OR/WT
L95
14
DG/YL
L94
14
OR/WT
L94
14
OR/WT
L95
14
DG/YL
L50
18
WT/TN
F19
14
RD/BK
L62
14
BR/RD
L63
14
DG/RD
87A
87
85
30
86
TRAILER
TOW
BRAKE
LAMP
RELAY
TRAILER
TOW
LEFT
TURN
RELAY
TRAILER
TOW
RIGHT
TURN
RELAY
Z150
18
BK
S408
(8W-15-19)
Z150
14
BK
L62
14
BR/RD
Z150
12
BK
L63
14
DG/RD
S410
(8W-15-19)
F
E
TO
C310
(8W-54-5)
2
9
8
10
TRAILER
TOW
CONNECTOR